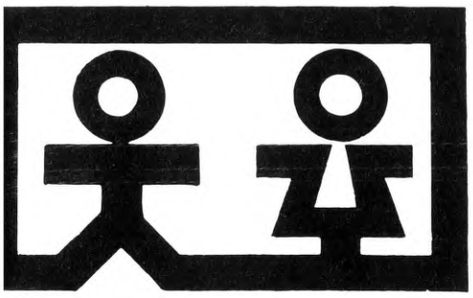

Big Print

In the past visually impaired people have had limited access to quality Australian fiction and have had to rely almost entirely on a handful of Australian novels imported from overseas.

Australian Large Print was established in 1985 as a result of requests from librarians for more large print books with Australian content. It aims to produce large print editions of quality Australian fiction utilising all Australian materials, expertise and printing. The first two titles in their publishing program, Evan Green's *Alice to Nowhere* and Clyne Mitchell's *Man From Snowy River,* were released earlier this year.

For further information contact: Australian Large Print, 547 George Street, North Fitzroy, Vic 3068 (03) 690 6259

Treasures Revealed

Of all the wrecks scattered around the South Australian coastline, one of the most significant is that of the barque *Zanoni.* It has remained untouched, unplundered for 116 years, lying on the seabed near Ardrossan in the Gulf of St. Vincent.

The *Zanoni,* typical of the many small sailing vessels which brought the first colonists to South Australia, is noteworthy due to her composite construction. She had an iron frame-work covered with a teak hull, similar to the famous *Cutty Sark* preserved in Britain.

Many of the treasures recovered from the *Zanoni* will be on display for the first time in the Exhibition Hall at the State Library of South Australia.

ACT Library Service

The Canberra Public Library Service will now be known as the ACT Library Service. the name has been changed to reflect the Library Service's progress to providing a State type library service to the ACT community. To enable a full range of library services to be available a proposal for a new Central Library building in Civic Centre is currently being developed. The position of City Librarian will be redesignated Director, ACT Library Service.

Accessioning accessory

The State Library of Queensland bindery has come up with a very practical solution to an accessioning problem; where to put the item while you are using the keyboard?

The stand has been designed to be used with a split level workstation, where the keyboard can be set below the level of the screen. The stand sits between the screen and keyboard with its rear edge under the screen supports. This positions the item in the operator's line of sight and provides a counterbalance for heavy volumes.

The overall width is 48 cm. with a cross-section as illustrated. The stands are constructed from 3 000cm strawboard reinforced along the lower edge and covered in mottled neutral grey Crash Canvas.

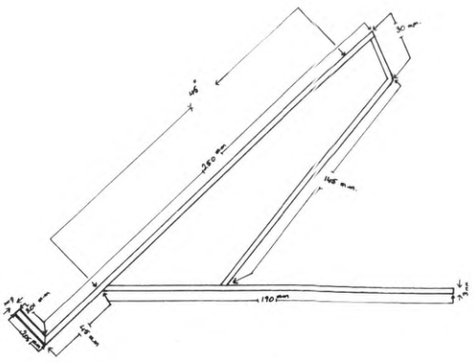

Who's Where

★ Joyce Kirk has recently taken up an appointment as Lecturer, Department of Information Studies, Kuring-gai College. Previously a Senior Education Officer, Library Services, NSW Department of Education, she was involved in the development of an Information Skills K-12 Curriculum. Joyce's major teaching responsibilities are currently in the areas of information users and teacher-librarianship.

Joye Volker has recently been appointed Senior Librarian at the Canberra School of Art Library. Joye brings wide experience in art reference, reader education and administration to the position having been a Senior Librarian and Readers Adviser at the Australian National University Library where she has worked since 1977.

Before this she worked at the University of British Columbia Library in Vancouver, Canada while completing a Masters degree in the bibliography of environmental design. From 1974-1976 she taught at the Vancouver School of Art (now the Emily Carr College of Art and Design) in the communication and design courses. Joye more recently has acted as Secretary of the LAA/Canberra Online Users Group during 1984/85.

★ The Heyward Library at the Bendigo College of Advanced Education has appointed five new subject librarians. These librarians will perform traditional library roles serving the needs of the five faculties at the College.

Hanumant Umranikar will become Reader Services/Science Librarian; Sindhu Gore will be Chief Cataloguer/Health Sciences Librarian; Cathy Hunt will be Acquisitions/Business Studies Librarian; Dianne McGowan will be Periodicals/Arts Librarian, and Jeanette Dazkiw will be Circulation/Education Librarian.

One of the Colleges longest serving librarians, Phyllis Toy, is retiring on 2 January 1987. Phyllis has served as a reference and reader education librarian since her appointment in 1970. Her advice and experience will be missed by both her colleagues at the Heyward Library and throughout Victoria.

We provide:

- A total procurement service for Australian, New Zealand, U.K., North American and other overseas publications.
- A priority order service.
- A continuations service for annuals and irregular series.
- On-approval plans for Australasian and Library Science publications according to the subject profiles nominated by librarians.
- An Australasian New Title Service profiled according to your subject requirements.

James Bennett Library Services

4 COLLAROY STREET, COLLAROY, NSW 2097, AUSTRALIA . PH. (02) 982 2122